mistral

60cm 4 Zone Knob Control Ceramic Cooktop

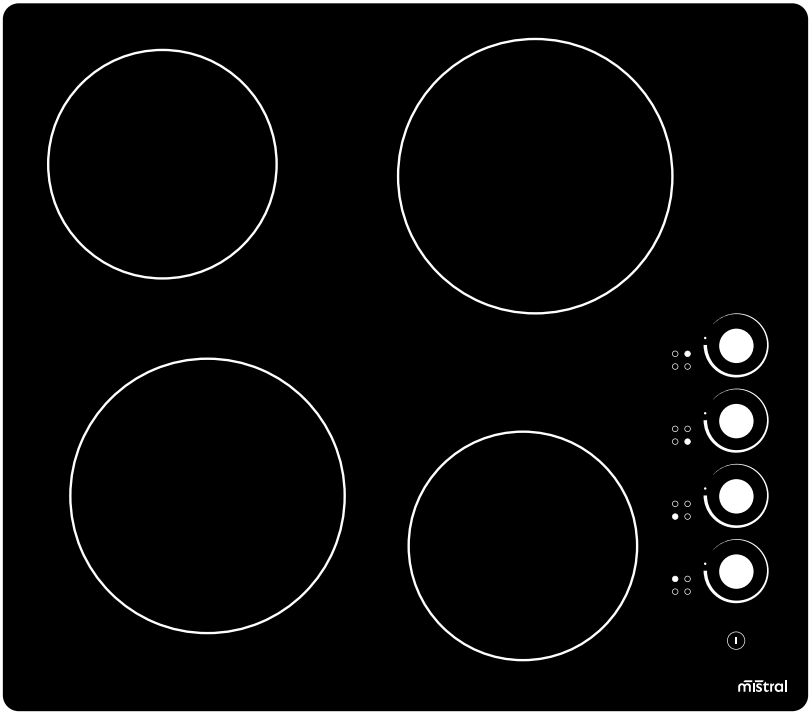

Instruction Manual

Model: MBCC620-4GK & MBCC620-4GK-F

v1 October 2025

Thank you.

When you step up to a Mistral product, you can rest assured you're making the better choice. Because when you buy a Mistral product you're buying a brand Australian Households have trusted since 1968.

This Mistral appliance carries a 3 year in home warranty, be sure to retain your user manual and receipt.

For all warranty and technical queries please phone:

AUS: 1300 373 199
NZ: 0800 764 912

THE AUSTRALIAN ALL-ROUNDER SINCE 1968

mistral

Contents

Safety Instructions 4

Caution 4

Installation 6

Electrical connection 6

Assembly of ceramic hob 6

Preparing the unit for a built-in appliance 6

Installing the hob 6

Fitting guidelines 8

Ceramic Hob Surface Layout 10

4 zone ceramic hob schematic diagram 10

Control panel layout 10

Using the Ceramic Hob 11

Before first use 11

Operation instruction 11

Hob Guidelines 12

Maintenance and Cleaning 13

Preventing Glass Cracks 14

Environmental Note 14

Safety Instructions

This User Instruction Manual contains important information, including safety & installation points, which will enable you to get the most out of your appliance. Please keep it in a safe place so that it is easily available for future reference; for you or any person not familiar with the operation of the appliance.

⚠ Caution

- Do not use the ceramic hob until you have read this instruction manual. The ceramic hob is intended for household use only.
- The appliance becomes hot during operation. Take care not to touch the hot surface.
- Always keep children away from the ceramic hob.
- While in operation direct contact with the ceramic hob may cause burns!
- Ensure that small items of household equipment, including connection leads, do not touch the hob as the insulation material of this equipment is usually not resistant to high temperatures.
- Do not leave the ceramic hob unattended when frying. Oils and fats may catch fire due to overheating or boiling over.
- Do not switch on the hob until a pan has been placed on it.
- Do not put pans weighing over 25kg on the hob.
- Do not use the ceramic hob in the event of a technical fault. Any faults must be fixed by an appropriately qualified and authorized person.
- In the event of any incident caused by a technical fault, disconnect the power and report the fault to the service centre to be repaired.
- The rules and provisions contained in this instruction manual should be strictly observed. Do not allow anybody who is not familiar with the contents of this instruction manual to operate the ceramic hob.
- The ceramic hob should not be cleaned using steam cleaning equipment.
- IMPORTANT: The adjacent furniture or housing and all materials used in the installation must be able to withstand a minimum temperature of 95°C above the ambient temperature of the room it is located in, whilst in use.
- Any damage caused by the appliance being installed in contravention of this temperature limit, or by placing adjacent cabinet materials closer than 4mm to the appliance, will be the liability of the owner.
- This appliance complies with all current European safety legislation. We do wish to emphasize that this compliance does not remove the fact that the appliance surfaces will become hot during use and retain heat after operation.

Child Safety

- We strongly recommend that babies and young children are prevented from being near to the appliance and not allowed to touch the appliance at any time.
- If it is necessary for younger family members to be in the kitchen, please ensure that they are kept under close supervision at all times.

General Safety

- This appliance is not intended for use by persons (including children) with reduced physical, sensory or mental capabilities, or lack of experience and knowledge, unless they have been given supervision or instruction concerning use of the appliance by a person responsible for their safety.
- Children should be supervised to ensure that they do not play with the appliance.
- NEVER try to extinguish a fire with water, but switch off the appliance and then cover flame e.g. with a lid or a fire blanket.
- WARNING: Danger of fire: do not store items on the cooking surfaces.
- Means for disconnection must be incorporated in the fixed wiring in accordance with the wiring rules.
- Do not allow electrical fittings or cables to come into contact with areas on the appliance that get hot.
- Do not use the appliance to heat the room it is located in or to dry clothing.
- Do not install the appliance next to curtains or soft furnishings.

- If the supply cord is damaged, it must be replaced by the manufacturer, its service agent or similarly qualified persons in order to avoid a hazard.
- The appliance is not intended to be operated by means of an external timer or separate remote-control system.
- Power cord can't accessible after installation.
- This product can be worked but not through outside timer and remote control.
- Warning: If the surface is cracked, switch off the appliance to avoid the possibility of electric shock, for hob surfaces of glass ceramic or similar material which protect live parts.
- Warning: a steam cleaner is not be used.
- CAUTION: The cooking process has to be supervised. A short term cooking process has to be supervised continuously.
- WARNING: Unattended cooking on a hob with fat or oil can be dangerous and may result in a fire.
- This appliance should be connected to a circuit which incorporates an isolating switch which can accessible by the user after installation providing full disconnection from the power supply. The disconnection may be achieved by incorporating a switch in the fixed wiring in accordance with the wiring rules.
- Warning: Before obtaining access to terminals, all supply circuits must be disconnected.
- WARNING: Use only hob guards designed by the manufacturer of the cooking appliance or indicated by the manufacturer of the appliance in the instructions for use as suitable or hob guards incorporated in the appliance. The use of inappropriate guards can cause accidents.
- WARNING: The appliance and its accessible parts become hot during use.
- Care should be taken to avoid touching heating elements.
- Regarding the instructions for how to Installation,thanks to refer to the section "Installation".
- Children less than 8 years of age shall be kept away unless continuously supervised.
- This appliance can be used by children aged from 8 years and above and persons with reduced physical, sensory or mental capabilities or lack of experience and knowledge if they have been given supervision or instruction concerning use of the appliance in a safe way and understand the hazards involved. Children shall not play with the appliance. Cleaning and user maintenance shall not be made by children without supervision.
- Ensure that the power cord does not touch the bottom shell after hob installing

Installation

Electrical connection

Before connecting the appliance, make sure that the supply voltage marked on the Rating Plate corresponds with your mains supply voltage.

WARNING: THIS APPLIANCE MUST BE EARTHED.

- If you have to change the oven power cord, the earthing (yellow/green) conductor must always be 10 mm longer than the line conductors.
- Care must be taken to ensure that the temperature of the mains supply cable does not exceed 50°C.
- If the mains supply cable is damaged, then it must be replaced by an appropriate replacement which can be obtained from Spares Department.

Assembly of ceramic hob

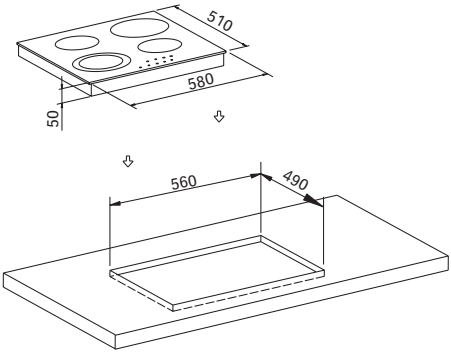

Preparing the unit for a built-in appliance

⚠ WARNING

- The kitchen units that are in direct contact with the appliances must be heat-proof (min. 95°).
- The appliance can be installed on a work surface with a thickness of between 30 and 40 mm and near to walls which are higher than the work surface,maintaining a minimum distance of 100 mm.
- Carry out all cutting of the unit and work surface then carefully remove shavings or sawdust before inserting the appliances.
- To ensure a correct ventilation of the hob please comply with the dimensions shows in figures.
- Always refer to the manufacturer for specific instructions,
- Make sure the surface is level and square and that no part interferes with the space required for installation.
- Prepare the cut as indicated (see installation dimensions).

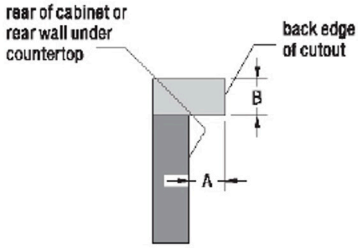

Fig.5

A. 40mm min
B. 40mm max

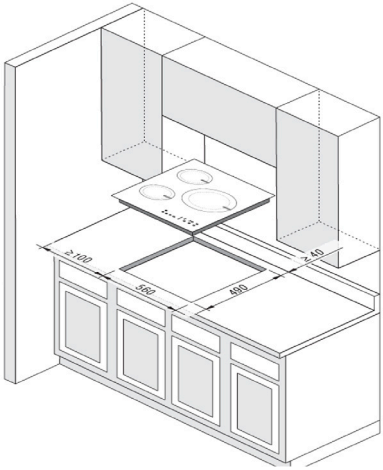

Installing the hob

⚠ WARNING

- Risk of cutting.
- Be careful of cutting edges.
- End parts in foamed plastic - be careful.
- During transportation these could cause slight injury or cuts.

Remove the material and envelope of documents from the packaging.

Before proceeding with installation read the work instructions carefully.

Step. 1

Put a towel or cloth on the work surface. Place the hob face down on the protected surface.

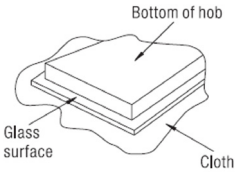

Step. 2

Apply the strip seal, supplied with the hob, which is for sealing it onto the work surface.

Do not use silicone. Apply the seal to the edge of the bottom of the hob, leaving about 3mm from the edge of the glass.

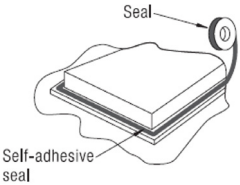

Apply the seal all around the circumference.

Cut any excess and bring the two ends of the seal together so they match.

Step. 3

Fix the brackets (4pcs) on the front side and rear side by screw. Put the hob in the cut-out cabinet, and make it centered. Ensure that the front edge of the hob is parallel to the side edge of the work surface.

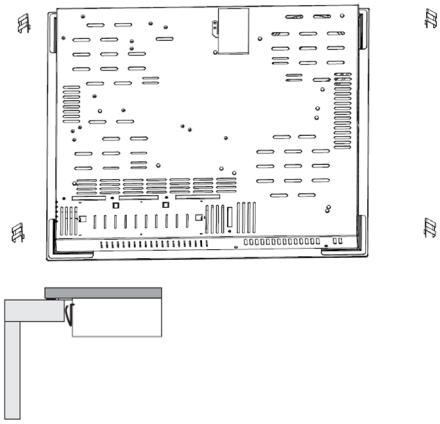

- **IMPORTANT:** You must observe the ventilation requirements shown in the drawing below.
- **IMPORTANT:** There are ventilation holes around the outside of the hob. YOU MUST ensure that these holes are not blocked by the work top, when you put the hob into position (see drawing below).
- **IMPORTANT:** Do not use a silicon sealant to seal the appliance against the aperture. This will make it difficult to remove the hob from the aperture in future, particularly if it needs to be serviced.

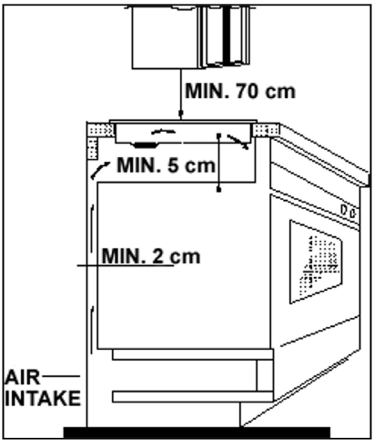

- Carefully turn the hob back over and then gently lower it into the aperture hole that you have cut out.
- Add a wooden board to the bottom of the stove.

Fitting guidelines

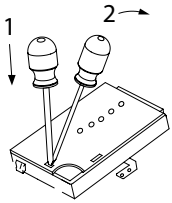

The ceramic hob is manufactured to work with two-phase alternating current (420V2N~50Hz). The voltage rating of the ceramic hob heating elements is 230V. Adapting the ceramic hob to operate with one-phase current is possible by appropriate bridging in the connection box according to the connection diagram below. The connection diagram is also found on the cover of the connection box. Remember that the connection wire should match the connection type and the power rating of the ceramic hob.

The connection cable must be secured in a strain-relief clamp.

Warning!

Remember to connect the safety circuit to the connection box terminal marked with ⏚ .The electricity supply for the ceramic hob must have a safety switch which enables the power to be cut off in case of emergency. The distance between the working contacts of the safety switch must be at least 3mm.

Before connecting the ceramic hob to the power supply it is important to read the information on the data plate and the connection diagram.

Wires for model MBCC620-4G/-F		
Adaptive voltage range and wires		The wiring diagram
220-240 1N~ 50-60Hz	380-420 2N~ 50-60Hz	KADO XT/ TB102-3
H05VV-F 3G2.5	H05VV-F 4G2.5 H05GG-F 4G2.5 H07RN-F 4G2.5	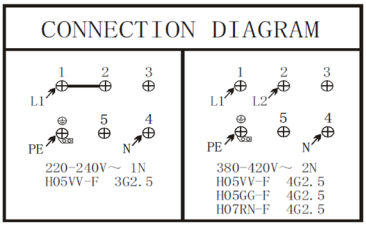

- The cable connections must be in accordance with the diagram located on the bottom of the hob.
- The cable type must be connected to the corresponding power supply terminal box.
- You should use a good quality screwdriver to carefully, fully tighten ALL of the terminal screws.
- If when the hob is first switched on, only two of the zones work, you should recheck that the terminal screws are all fully tightened. This should be done before contacting the Customer Care Department.
- IMPORTANT: The appliance must NOT be connected to the mains supply by means of a 13A plug and socket.
- This appliance must be wired into a 30 A double pole switched fused spur outlet, having 3 mm contact separation and placed in an easily accessible position adjacent to the appliance. It should not be located above the appliance and no more than 1.25m away from it.
- The cable can be looped if necessary, but make sure that is not kinked or trapped when the hob is in position. Care must be taken to avoid the cable being in contact with hot parts of the appliance.

Replacing the mains supply cable

If the mains supply cable is damaged, then it must be replaced by an appropriate replacement.

The mains supply cable should be replaced in accordance with the following instructions:

- Switch the appliance off at the control switch.
- Open the terminal block on the underside of the hob.
- Unscrew the terminal screws fixing the cable.
- The “green-yellow” earth wire must be connected to the terminal marked ⏚. It must be about 10 mm longer than the live and neutral wires.
- The “blue” neutral wire must be connected to the terminal marked with letter (N) - the live wire(L1) must be connected to the terminal marked with letter (L1) (220-240V 1N~).
- The “blue” neutral wire must be connected to the terminal marked with letter (N) - the live wire L1 must be connected to the terminal marked with letter (L1),. the live wire L2 must be connected to the terminal marked with letter (L2) (380-420V 2N~).

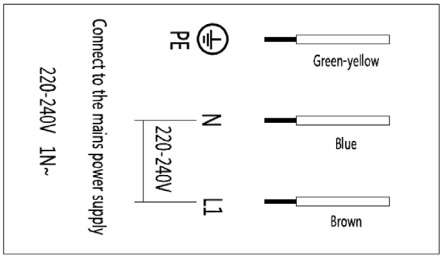

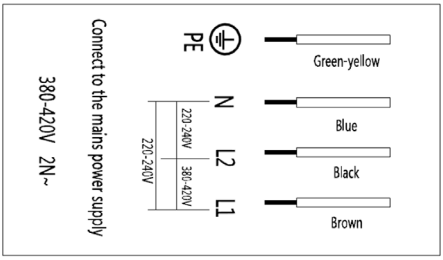

Electrical principle diagram

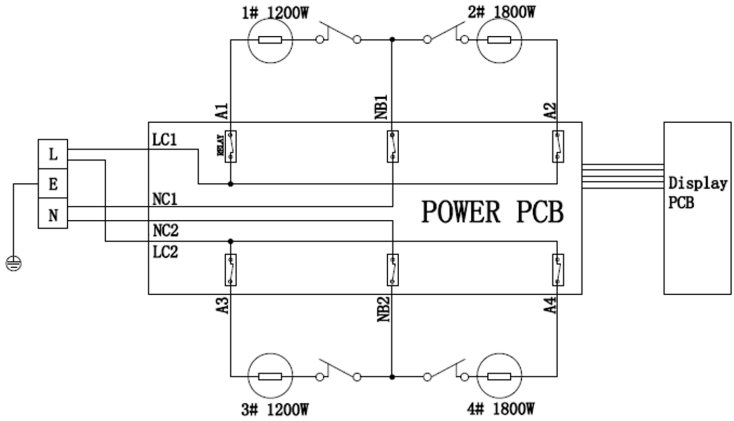

Ceramic Hob Surface Layout

4 zone ceramic hob schematic diagram

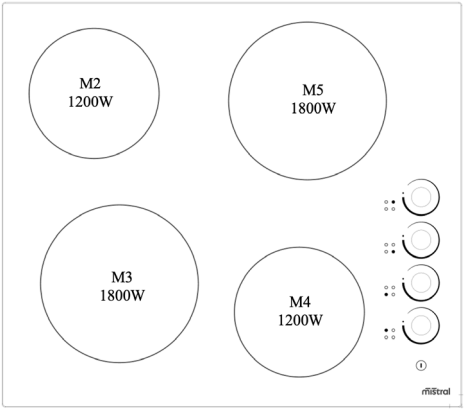

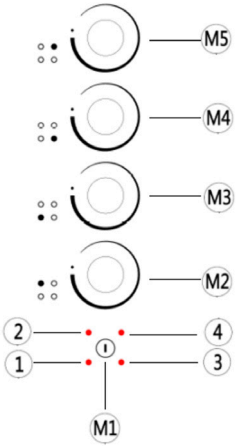

Control panel layout

Display and Control Methods

1.1 Display Method

Burner operation indication: The corresponding indicator light stays on when the burner is in operation.

Burner residual heat indication: The corresponding indicator light flashes (once per second) when the burner stops working.

Hob standby indication: All burner indicator lights turn on and off in rotation.

1.2 Control Method:

Touch (power button) + rotary switch (for adjusting the power level of the corresponding burner)

1.3 Button Functions:

Button	Function	Button	Function
M1	ON/OFF button	M2	Rear left burner power level selecting
M3	Front left burner power level selecting	M4	Front right burner power level selecting
M5	Rear right burner power level selecting		

1.4 Display Icons:

Icons	Function
1	LED light for burner 1, indicating burner status
2	LED light for burner 2, indicating burner status
3	LED light for burner 3, indicating burner status
4	LED light for burner 4, indicating burner status

Using the Ceramic Hob

Before first use

IMPORTANT: You should clean the ceramic hob surface (see “Maintenance and cleaning” section).

- You should switch on one cooking zone at a time, for 5 minutes at the maximum setting. This will help to eliminate any new smell that exists and evaporate any humidity that has formed on the heating elements during transit.
- Do not burn off more than one zone at once.
- You must place a saucepan filled half full with cold water on the cooking zone as you burn it off.

Operation instruction

1. Power On

- After the appliance is powered on, all of the indicator lights on the display screen will light up for 2s, then the appliance goes into shutdown mode.
- Shutdown status: All the display are turned off except for the indicator light on the
- heated cooking zone. At this time, only the power button “ ⏻ ” can be long pressed to operate, and the operations of other programming knobs are invalid

2. Standby

- Under shutdown status, press and hold “ ⏻ ” button for 3s, all cooking zone indicator lights alternately turn on and off. The hob will enter standby mode.
- Under standby mode, if no cooking zone has heating operation, the appliance will go into shutdown status automatically after 1 minute.

3. Heating Control

- Under standby mode, you can set the power level by the corresponding programming knobs. In the process of adjusting the power level, clockwise rotation can increase the power level from 0 to 15 (maximum), and then rotate back to “0” for a cycle; Counter clockwise rotation can be adjusted from 15 to 1 power levels, and then rotate back to “0” for a cycle.
- When the hob is in heating status, press and hold “ ⏻ ” power button for 3s to switch off, all the cooking zones stop heating. The indicator light of the previously heated cooking zone blinks, indicating that the surface of the corresponding cooking zone is in high temperature state, that is high temperature warning.
- When one of the cooking zones needs to stop heating, the cooking zone can be selected through the corresponding programming knob, turn the programming knob to adjust the power level to “0” that turns off this cooking zone. At this time, other cooking zones heating is not affected.

4. Power Level Adjustment

- You can select the appropriate output power level by rotating the programming knob of the corresponding cooking zone.
- The power level is divided into 16 levels, including the shutdown level (0 level). For the programming knob, rotate clockwise to increase the power level and anticlockwise rotation to decrease the power level. When rotating anticlockwise, if the power level is “0” at the beginning, you will rotate the 15 and then decrease the gear successively.
- When the power level of any cooking zone is set to 0, the power output of the zone will be stopped automatically.
- If one of the burners has been heated, and when the power level of all the cooking zones is 0, the appliance will automatically enter the shutdown status after 1 minute without effectively programming knob operation.

5. Power Off

- Under standby mode or heating mode, press and hold “ ⏻ “ button for 3s, the appliance will go into shutdown mode.

6.Default Timing

- All burners feature a default timer function during heating. The relationship between default timer duration and power levels is shown in the following table:

Power Level	1	2	3	4	5	6	7-15
Default timing (h)	6	6	5	5	4	4	1.5

- The burner will automatically stop heating when the timer expires, and the system will enter standby mode.

7. High Temperature Warning

- When manually powering off by long-pressing the power button “ ⏻ “ for approximately 3 seconds, all burners stop heating while

the cooking surface remains hot. The corresponding LED light of each stopped burner will flash slowly (once per second) to indicate high temperature warning on the cooking surface.

- The LED flashing warning will continue for 35 minutes after shutdown, provided the burner has been used for heating.

8. Protection Functions

- Overheat Protection: When a burner exceeds safe temperature limits, the system automatically stops heating and resumes operation after temperature decreases.
- Residual Heat Protection: After shutdown, the corresponding LED flashes slowly (once per second) to indicate high surface temperature (do not touch).
- Power Disconnection Protection: For models with power plugs, voltage between L/N pins must drop to safe levels within 1 second after disconnection.
- Water Spill Protection: If water covers the power button for over 10 seconds during operation, active burners immediately stop heating and the hob shuts down.

9. Circuit Board Error Codes and Solutions

- When a circuit board fault occurs, the LED on the display panel flashes (every 4 seconds) to indicate the error code, and the affected burner stops heating.

How to use the hot plate

Put the pot in center of the heating zone, Turn the knob clockwise and anticlockwise to turn on the hob.

High temperature indication lamp:
When the glass plate is too hot, the high temperature indication lamp will light up, don't touch the glass plate until the indication lamp goes out.

Shut down: After using, please turn the knob to "OFF", the hob will stop heating.

Caution!

- Ensure the heating plate is clean-a soiled zone does not transfer all of the heat.
- Protect the plate against corrosion.
- Switch off the plate against corrosion.
- Do not leave pans with prepared dishes based on fats and oils unattended on the switched-on plate; hot fat can spontaneously catch fire.

Hob Guidelines

- The first few times the hob top is used, it may give off an acrid, burning smell. This smell will disappear completely with repeated use.
- The worktop is fitted with cooking areas of different diameter and power.
- The positions where the heat will radiate from are clearly marked on the hob top. The saucepans must be positioned exactly on these zones for efficient heating to occur. Pans should have the same diameter as the cooking zone that they are being used on.
- You should not use saucepans with rough bottoms, as this can scratch the ceramic surface.
- Before use, make sure that the bottoms of the saucepans are clean and dry.
- When cold, the bottom of the pans should be slightly concave, as they expand when hot and lie flat on the surface of the hob. This will allow the heat to transfer more easily.
- The best thickness for the bottom of the pans is 2 – 3 mm of enameled steel and 4 – 6 mm for stainless steel with sandwich type bottoms.
- If these rules are not followed, then there will be a great loss of heat and energy. Heat not absorbed by the saucepan, will spread to the hob, frame and surrounding cabinets.
- Preferably cover pans with a lid to permit cooking at a lower heat.
- Always cook vegetables and potatoes, etc. in as little water to reduce cooking times.
- Food or liquid that has high sugar content may damage the hob top if it comes into contact with the ceramic hob surface. Any spillages should be wiped up immediately, however this may not prevent the hob surface from becoming damaged.
- IMPORTANT: The ceramic hob surface is tough; however it is not unbreakable and can be damaged. Especially if pointed or hard objects are allowed to fall on it with some force.

Maintenance and Cleaning

⚠ Cleaning operations must only be carried out when the hob is cool.

The appliance should be disconnected from your mains supply before commencing any cleaning process.

Cleaning the ceramic hob top

⚠ Any residues that are left on the hob top surface from cleaning agents will damage it. You should remove any residues with warm water mixed with a little washing up liquid.

⚠ Abrasive cleaners or sharp objects will damage the hob surface; you should clean it using warm water mixed with a little washing up liquid.

⚠ You may find it easier to clean some deposits whilst the hob surface is still warm. However you should take care not to burn yourself if cleaning the hob surface when it is still warm.

After each use

- Wipe the appliance over with a damp cloth.
- Dry the appliance by rubbing the surface with a clean cloth.

Important!
The inside of the hob should only be washed with warm water and a small amount of washing-up liquid.

Caution!
Ensure the heating plate is clean-a soiled zone does not transfer all of the heat.

Protect the hob against corrosion.

Switch off the hob against corrosion.

Do not leave pans with prepared dishes based on fats and oils unattended on the switched-on plate; hot fat can spontaneously catch fire.

⚠ **Important:** If your appliance appears not to be operating correctly, Please contact the dealer.

DO NOT ATTEMPT TO REPAIR THE APPLIANCE YOURSELF.

Please note that if an engineer is asked to attend whilst the product is under guarantee and finds that the problem is not the result of an appliance fault, then you may be liable for the cost of the call out charge.

The appliance must be accessible for the engineer to perform any necessary repair. If your appliance is installed in such a way that an engineer is concerned that damage will be caused to the appliance or your kitchen, then he will not complete a repair.

Cleaning Table

Type of deposit	Remove immediately?	Remove when the appliance has cooled down?	What should I use to remove the deposit?
Sugar or food/liquid containing sugar	Yes	No	Ceramic hob scraper
Tin foil or plastic	Yes	No	Ceramic hob scraper
Fat splashes	No	Yes	Ceramic hob cleaner
Metallic discolouration	No	Yes	Ceramic hob cleaner
Water splashes or water rings	No	Yes	Ceramic hob cleaner

Preventing Glass Cracks

Despite the sturdiness of the glass surface of the cooktop, it is important to understand that it could be vulnerable to the following specific factors that can result in cracks of the glass surface.

1. Proper Installation: Follow precise installation guideline as per this instruction manual. If the cut-out dimension and tolerance aren't met, then there is a risk of the glass fracturing due to expansion and contraction.
2. Managing Thermal Stress: Glass is very sensitive to temperature changes. Always let the cooktop to cool down completely before performing any cleaning. Avoid placing extremely hot pans directly on a cold surface of the cooktop. Gradually adjust heat settings to prevent extreme temperature fluctuations.
3. Careful Cookware Handling: To prevent impact damages, handle the cookware gently when placing them on the cooktop. Avoid dragging heavy pots across the surface, as this may cause glass scratches and weaken its integrity.
4. Distributing Weight Evenly: Distributing weight evenly across the cooktop. Avoid concentrating weight in specific areas of the cooktop especially near its edges or corners, which will cause stress and strain on the glass.
5. Weight Limits: Be cautious when using heavy or oversized cookware. Strictly follow the weight limit specified in this instruction manual.

Understanding these measures and implementing them proactively will ensure the prolong lifespan of your glass cooktop. By following these precautions and this user manual diligently, you'll ensure the enduring your cooktop for years to come.

Environmental Note

Note: Before discarding an old appliance, switch off and disconnect it from the power supply.

Cut off and render any plug useless. Cut the cable off directly behind the appliance to prevent misuse. This should be undertaken by a competent person.

DISPOSAL: Do not dispose this product as unsorted municipal waste. Collection of such waste separately for special treatment is necessary.

This appliance is marked according to the European directive 2002/96/EC on Waste electrical and Electronic Equipment (WEEE). By ensuring this product is disposed of correctly, you will help prevent potential negative consequences for the environment and human health, which could otherwise be caused by inappropriate waste handling of this product.

The symbol on the product or on the documents accompanying the product indicates that this appliance may not be treated as household waste. Instead it shall be handed over to the applicable collection point for the recycling of electrical and electronic equipment.

Disposal must be carried out in accordance with local environmental regulations for waste disposal. For more detailed information about treatment, recovery and recycling of this product, please contact your local city office or local waste management office.

The packaging materials that we use are environmentally friendly and can be recycled. Please discard all packaging material with due regard for the environment.

Warranty

1.1 In this warranty:

1.1.1 Australian Consumer Law means the law as set out in Schedule 2 of the Competition and Consumer Act 2010;

1.1.2 Company means GSM Retail Australia Ply Ltd ABN 53 007 682 475 of 142-144 Fullarton Road, Rose Park SA 5067. Telephone 1300 373 199. Email admin@gsmretailgroup.com

1.1.3 Consumer means a "consumer" as that term is defined in Section 3 of the Australian Consumer Law as the original purchaser of a Mistral product;

1.1.4 Consumer Guarantees means the guarantees under the Australian Consumer Law;
1.1.5 You means the Consumer.

1.2 Nothing in this warranty affects any person's rights under the Australian Consumer Law. The benefits to any consumer under this warranty are in addition to the rights and remedies available under any Consumer Guarantees.

1.3 Subject to the other clauses of this warranty, the Company warrants to the Consumer that the Mistral product will be free of manufacturing defects and will perform to the Company's specifications.

1.4 The benefit of this warranty extends only to the Consumer as original purchaser of a Mistral product which is installed in a domestic household area.
*The in Home warranty does not apply to Commercial and or industrial usage.*Please See 1.7.7 for additional information

1.5 This warranty commences on the date of purchase of the Mistral product by the Consumer and continues for the benefit only of the Consumer until the expiry of three (3) year Warranty Period.

1.6 If within the Warranty Period a manufacturing defect is discovered in the Mistral product or it fails to perform to the Company's specifications as a result of some defect in materials, components or workmanship (Defect) then the Company will, at its option, repair the Mistral product or supply a replacement Mistral product free of charge. A replacement Mistral product may differ from the original product purchased by the Consumer.

1.7 This warranty will not apply to any Mistral product:

1.7.1 Installed by any person other than a qualified tradesperson;or

1.7.2 Subjected to misuse, neglect, negligence or accidental damage; or

1. 7.3 Operated in any way contrary to any operating or maintenance instructions;or

1.7.4 Improperly handled, installed or maintained;or

1.7.5 Altered or modified prior to or after installation; or

1. 7.6 Damaged directly or indirectly by power surges, electrical storm damage or connection to incorrect power supply

1.7.7 Industrial and or Commercial usage is inclusive of staff areas in office/ shop environments, hotel motel or other similar accommodation or rental type properties including Bed and Breakfast establishments.

The Australian Consumer Law requires the inclusion of the following statement with this warranty:

Our goods come with guaranteed that cannot be excluded under the Australian Consumer Law. You are entitled to a replacement or refund for a major failure and for compensation for any other reasonably foreseeable loss or damage. You are also entitled to have the goods repaired or replaced if the goods fail to be of acceptable quality and the failure.

FOR TECHNICAL ENQUIRIES CALL 1300 373 199 (AUSTRALIA) OR 0800 764 912 (NEW ZEALAND)

1.8 You must provide proof of your purchase of the Mistral product and the date of purchase in order to obtain the benefit of this warranty.

1.9 If you live outside the service area of the Company or one of its service agents, this warranty does not cover the cost of transport of the Mistral product for service nor the service agent's traveling costs to and from your home.

1.10 If you are required to transport the Mistral product to the Company or its service agent, you must ensure it is safely disconnected by a qualified tradesman and securely packed and insured. The Company does not accept any responsibility for loss or damage of the Mistral product prior to it being received by the Company or its service agent.

1.11 You will be responsible for all costs of returning a Mistral product to the Company and for redelivery of the Mistral product by the Company (whether it is the original or a repaired and/or a replacement Mistral product) and for any other expenses you incur in claiming under this warranty.

1.12 The Company or its service agent will examine any Mistral product and if the Company determines that it is defective through no fault of the Owner and is otherwise undamaged, the Company will repair or replace the Mistral product in accordance with this warranty.

DO NOT SEND IN THIS WARRANTY

Fill out the following details and file with your purchase invoice.

RETAIN & FILE WITH YOUR RECEIPT

Your purchase peceipt/invoice is proof of date of purchase. If you are unable to establish the date of purchase, or if the fault is not covered by this warranty, or if the product is found to be in working order, you will be required to bear all service call charges.
GSM Retail Australia Pty Ltd reserves the right to discontinue items, modify designs and change specifications without incurring obligation.
Whilst every effort is made to ensure that descriptions, specifications and other information in this publication is correct, no warranty is given in respect thereof and the company shall not be liable for any errors there in. Purchased from:

Co. Name:

Address:

Date of Purchase:

Serial number:

NOTE: Consistent with our continuing product development policy, improvements may have been made which render the contents of this packaging slightly different to that

FOR TECHNICAL ENQUIRIES CALL
1300 373 199 (AUSTRALIA)
0800 764 912 (NEW ZEALAND)
TO CONNECT YOU TO THE NEAREST AUTHORISED SERVICE CENTRE

GSM

Gerard Sourcing & Manufacturing

GSM Retail Australia PTY LTD

GSM Retail Group has a policy of continual improvement throughout the product range.
As such the unit contained within may differ slightly from the unit illustrated on the pack.

MADE IN CHINA for GSM Retail Australia Pty Ltd. Group Companies